A1

GENERAL NOTES

- FIRE HYDRANT AND SPRINKLER BOOSTER ASSEMBLIES SHALL BE HOUSED IN FULLY ENCLOSED LOCKABLE CABINET WITH SIGNAGE ALL IN ACCORDANCE WITH AS2419: 2021.
- THE BASE OF THE CABINET SHALL HAVE 40MM FALL AWAY TO THE STREET AND ALLOW ANY WATER WITHIN TO FLOW AWAY FREELY.
- FIRE ISOLATION VALVES SHALL BE FULL FLOW SCREW AND YOKE OR BUTTERFLY, LOCKED IN OPEN POSITION AND SHALL HAVE AFFIXED TO THE VALVE BODY OR STRAP A PLATE INSCRIBED WITH "FIRE MAIN VALVE SECURE OPEN".

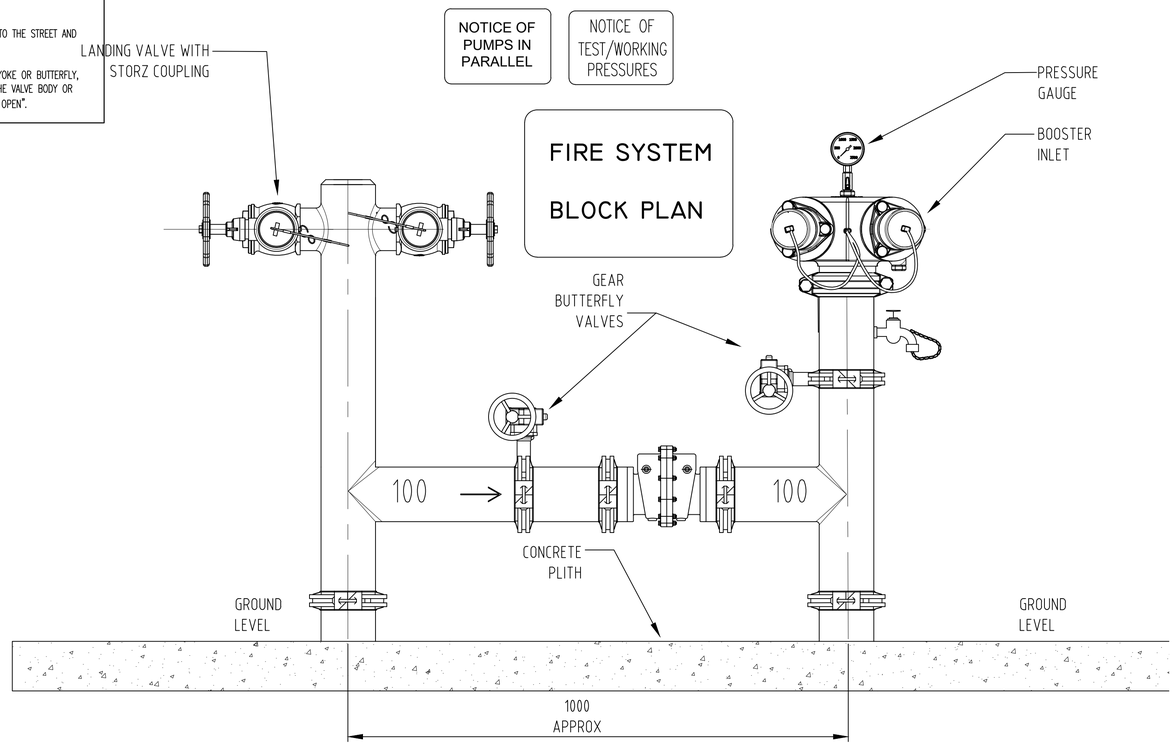

A FIRE HYDRANT BOOSTER ASSEMBLY
N.T.S

PROPOSED ø100 SYDNEY WATER MAIN
HARP STREET
APRROX AHD LEVEL – 25M
PRESSURE/FLOW INQUIRY No: 1623482
DATE: 12 04 2023
MAXIMUM PRESSURE FLOW: 72M/HEAD
MINIMUM PRESSURE FLOW: 49M/HEAD
FHR INSTALLATION (2xFHR): 0.66L/SEC @ 49M/HEAD

10L/SEC @ 48M HEAD
15L/SEC @ 44M HEAD
20L/SEC @ 39M HEAD
25L/SEC @ 33M HEAD

MAXIMUM PERMISSIBLE FLOW: 26L/SEC @ 27M/HEAD

0m 1 2 3 4 5
SCALE 1:100 ON ORIGINAL SIZE

REVISION	DESCRIPTION	DRAWN	DATE
A	FIRE HYDRANT LOCATION SKETCH	DC	24.04.23
B	TENDER ISSUE	DC	25.10.23
C	FOR COORDINATION	DC	12.02.24
1	CONSTRUCTION CERTIFICATE ISSUE	DC	20.03.24

FIRE BRIGADE HYDRANT BOOSTER PRESSURE	
DESIGN PRESSURE	kPa
MAX WORKING PRESSURE	1200
MAXIMUM TEST PRESSURE	1700
BRIGADE BOOST PRESSURE	700

HOSEREEL SYSTEM DESIGN CRITERIA (AS2441 - 2005)

1) Height of highest hosereel above booster - TBC m
2) System Design - 0.33L/s @ 220kPa x 2 Hosereels
3) System Commissioning Test - As Noted in Hydraulic Design

SYSTEMS	STANDARD OF PERFORMANCE

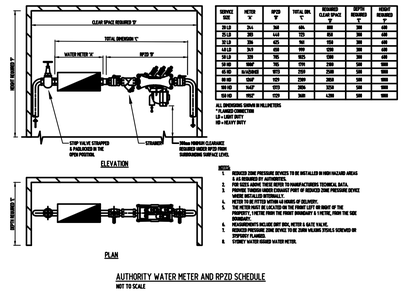

SERVICE SIZE	METER "A"	RPZD "B"	TOTAL DIM. "C"	REQUIRED CLEAR SPACE "B"	DEPTH REQUIRED "E"	HEIGHT REQUIRED "F"
20 LD	244	368	612	800	300	400
25 LD	300	448	725	850	300	400
32 LD	356	475	790	900	300	400
40 LD	244	600	900	1000	300	400
50 LD	300	705	1025	1100	300	400
80 HD	600*	705	1174	2000	500	1000
40 HD	244/600	1010	1350	2000	500	1000
80 HD	600*	1129	2000	2000	500	1000
100 HD	640*	1270	2006	2250	500	1000
150 HD	1150*	1270	2600	4,200	500	1000

ALL DIMENSIONS GIVEN IN MILLIMETERS
*FLANGED CONNECTION
LD = LIGHT DUTY
HD = HEAVY DUTY

NOTES:
1. REDUCED ZONE PRESSURE DEVICES TO BE INSTALLED IN HIGH HAZARD AREAS & AS REQUIRED BY AUTHORITIES.
2. PIPE SIZES ABOVE THESE REFER TO MANUFACTURERS TECHNICAL DATA.
3. CHANGE FLANGES UNDER EXCLUDED PORT OF REDUCED ZONE PRESSURE DEVICE TO SUIT PIPEWORK CONFIGURATION.
4. METER TO BE FITTED AFTER 24 HOURS OF DELIVERY.
5. THE METER MUST BE LOCATED ON THE FRONT LEFT RH SHARE OF THE PROPERTY, 1 METRE FROM THE FRONT BOUNDARY & 1 METRE, FROM THE SIDE BOUNDARY.
6. ARRANGEMENTS INCLUDE SHUT BOX, METER & GATE VALVE.
7. REDUCED PRESSURE ZONE DEVICE TO BE 20MM VALVES, STEEL & NORMED BR DIPWORK FLANGED.
8. SYDNEY WATER ISSUED WATER METER.

AUTHORITY WATER METER AND RPZD SCHEDULE
NOT TO SCALE

E WATER METER SIZING
N.T.S

HYDRANT SYSTEM DESIGN CRITERIA (AS2419 - 2021)

1. Height of highest hydrant above booster - 6 m (RL 33,000)
2. System Design unassisted - Basement 2 Hydrants - 20 l/s @ 250 kpa
   Ground Floor 2 hydrants - 20 l/sec @ 250 kpa
3. Fire Brigade Performance - 20 L/s @ 700kpa x 2 Hydrants operating
4. Fire Brigade Booster - RL 27,000 TBC

SYSTEM DESIGN PENETRATION

The service penetrations to fire rated elements of construction are to be carried out where required by the BCA 2022 using tested systems that achieve the required FRL and have been tested to -
AS 4072.1 - 2005 Service penetrations and control joints (incl Amdt 1) and
AS 1530.4 - 2014 Fire-resistance tests on elements of construction
Any core hole created shall be signed off by an NER Registered structural engineer.

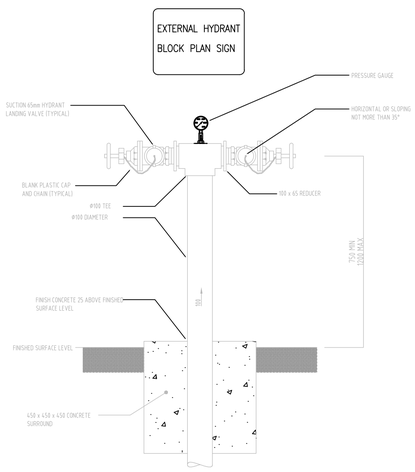

B EXTERNAL FIRE HYDRANT
N.T.S

C ALINE SINGLE PUMP ENCLOSURE
N.T.S

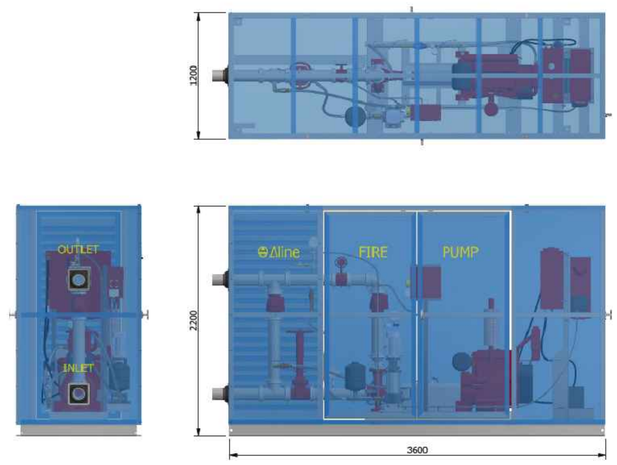

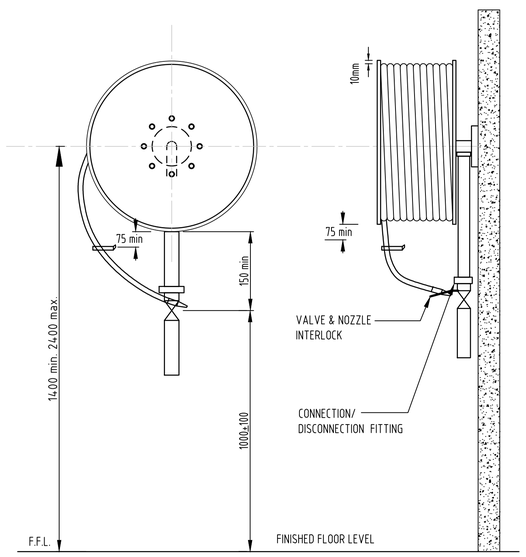

D FIRE HOSE REEL
N.T.S

CLIENT
MONUMENT (NSW) PTY LTD,
QUINTESSENCE ENTERPRISES PTY LTD
& TCEM INVESTMENTS PTY LTD

ARCHITECTS
MONUMENT DESIGN PARTNERSHIP
47 DRUMMOND STREET,
BELMORE NSW 2192
PH: 1300 795 075
FX: 1300 795 076

HYDRAULIC CONSULTANT
SCOTT COLLIS CONSULTING PTY LTD
HYDRAULIC AND FIRE
Tel: (02) 8824 9500
Mobile: 0433 665 388
Email: scott@scottcollis.com.au
Suite 9, 38 ROWE STREET
EASTWOOD, NSW 2122

PROJECT
WAREHOUSE DEVELOPMENT
16-18 HARP STREET,
CAMPSIE NSW 2194

DRAWING TITLE
HYDRAULIC SERVICES
DETAILS SHEET

SCALE:	NTC	DATE:	NOV 2021
DESIGN:	DC	CHECKED:	DC
DRAWN:	DC	APPROVED:	DC

Number Dwgs In Set: 17

JOB NUMBER	DRAWING NUMBER	ISSUE
21126	H17	1